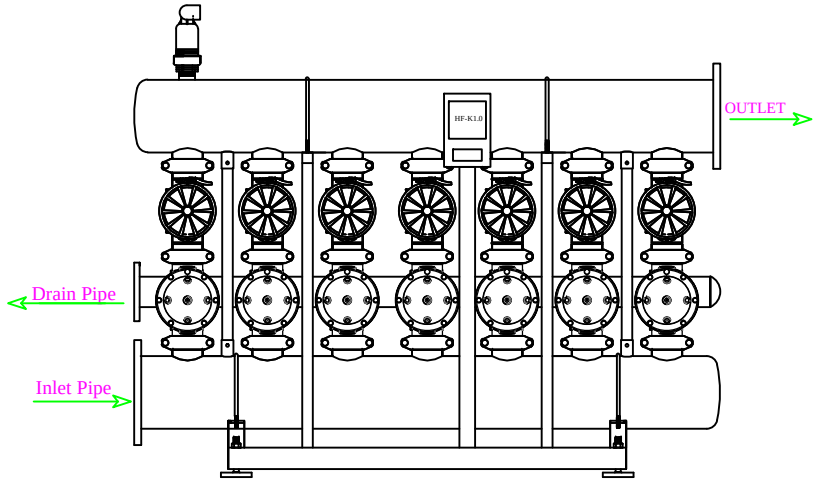

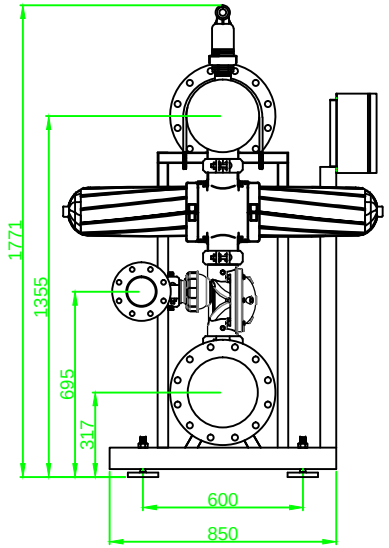

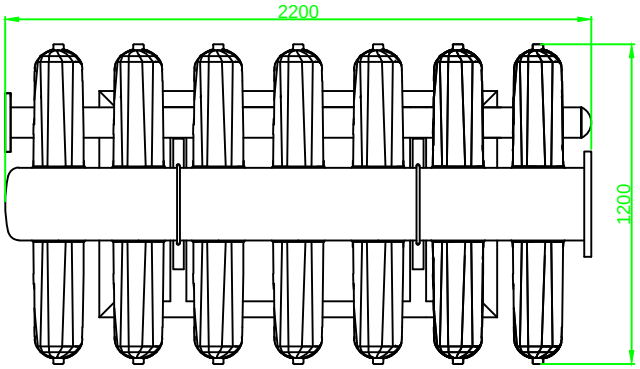

NOTES:
1. PIPING MATERIAL: HDPE , Carbon steel st, 304.
2. CONNECTION TYPE: ANSI 150# FLANGE.
3. MANUAL VALVES SHALL BE INSTALLED AT THE INLET AND OUTLET OF THE DISC FILTER.
4. THE DRAIN PIPE SHALL BE CONNECTED TO THE DRAINAGE SYSTEM.
5. POWER SUPPLY: 220V/1PHASE/50HZ.
6. CONCRETE FOUNDATION (HEIGHT: 200MM)
7.AND EXPANSION ANCHOR BOLTS ARE SUGGESTED FOR SITE INSTALLATION.

NO.		Description	Quantity	Spec. & Material	Weight	
		Inlet Pipe 10"	1	Carbon steel		
		Drain Pipe 4"	1	Carbon steel		
		Outlet Pipe 10"	1	Carbon steel		

标记	处数	分区	更改文件号	签名	DATE
R	内部评审版				
A	初步设计				

REV	DESCRIPTION	DESD	DATE	APPD	DATE	APPD	DATE

Beijing Haiao Technologies Co.,ltd

HF-A4-7-10DISCFILTER

DWG NO HF-A04-7-00-01

MATERIAL	QUANTITY	WEIGHT	SCALE
/	1		1:1

SHEET OF